SineWave Part Number	Schematic Drawing#	Approx Weight (LBS)
KMG45A01A	24281-1A	154
KMG45A01P	24281-1P	155

HorsePower (HP)	kVar	Max Amps	Voltage (V)	HZ	Phase
30	3.5	45	480	60	3

Thermal Switch
Terminal Block

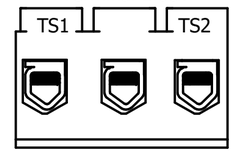

Wire Range: 18 AWG To 4 AWG.
Torque: 20 LB-IN (2.3 Nm)
Switch Opens on Temperature Rise
Contact Rating: 6A @ 120 VAC

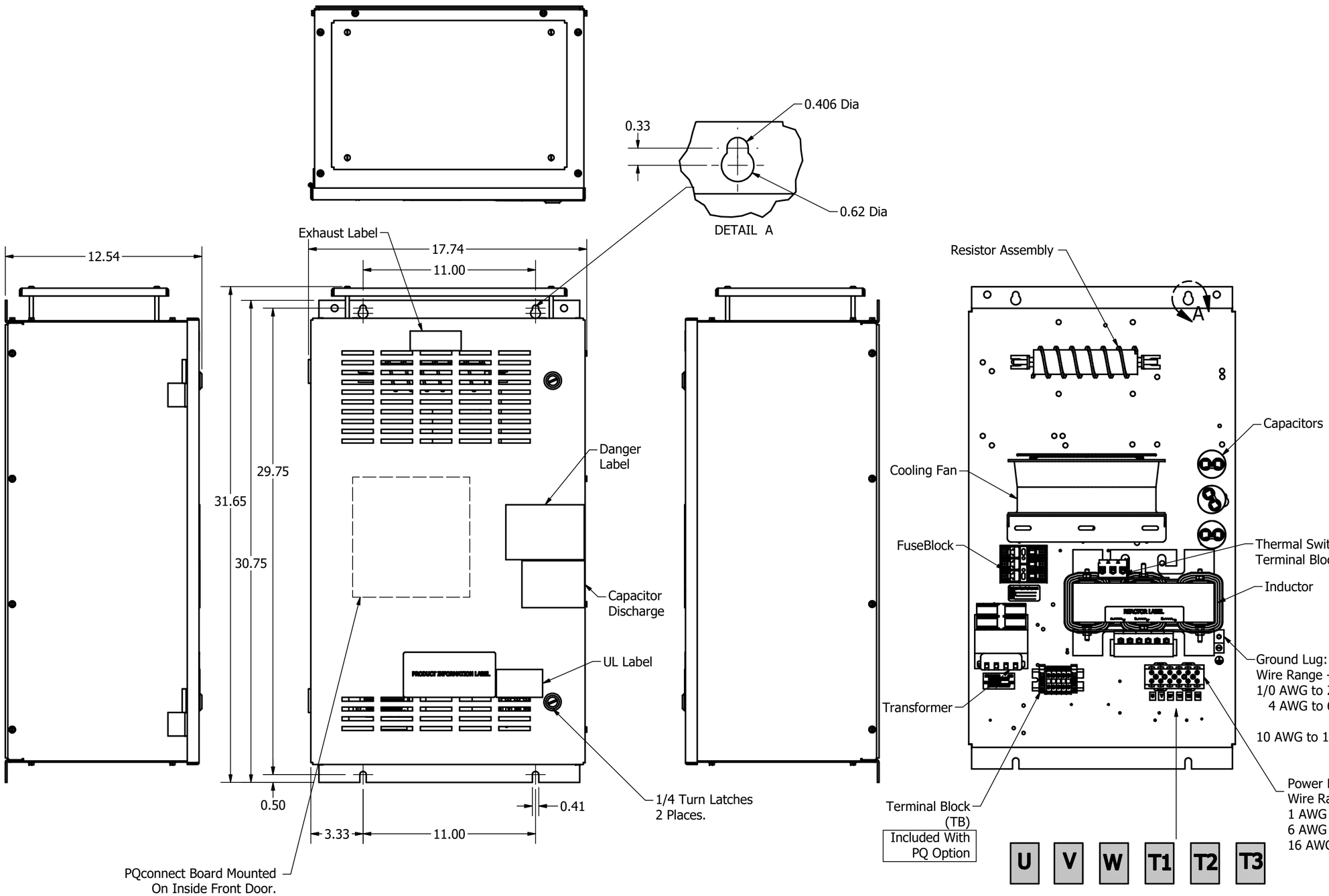

PQconnect Board Mounted
On Inside Front Door.
OPTIONAL

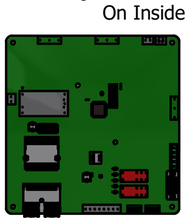

Customer Is Responsible For Installation to
Meet All National And Local Electrical Codes.

Material(s) Shall be RoHS Compliant

THE INFORMATION AND DESIGNS CONTAINED IN THIS DRAWING ARE CONFIDENTIAL AND THE PROPRIETARY PROPERTY OF ALLIED MOTION TECHNOLOGIES INC. AND ITS SUBSIDIARIES. NEITHER THIS DESIGN NOR ANY INFORMATION CONTAINED IN THIS DRAWING MAY BE REPRODUCED OR DISCLOSED TO OTHERS WITHOUT THE EXPRESS WRITTEN CONSENT OF ALLIED MOTION TECHNOLOGIES INC. AND ITS SUBSIDIARIES.

NO	REVISION	DATE	BY
C	6342 Add TB	07/14/23	JRN
B	Add PQconnect Board	6/17/2020	DSW

TOLERANCES (EXCEPT AS NOTED)
DECIMAL .XX ± .25 .XXX ± .10
FRACTIONAL ± 1/16
ANGULAR ± 1°

TCI An Allied Motion Company
W132N10611 Grant Drive
Germantown, WI 53022
© 2021 TCI, LLC

KMG45A01-, SineWave Filter
Enclosed Type 1, 30HP, 480V

DRN. BY: DSW | DATE: 10/07/2010 | 104354DG
SCALE: 1/8 | APRVD: | SIZE C | SHT.1 OF 1